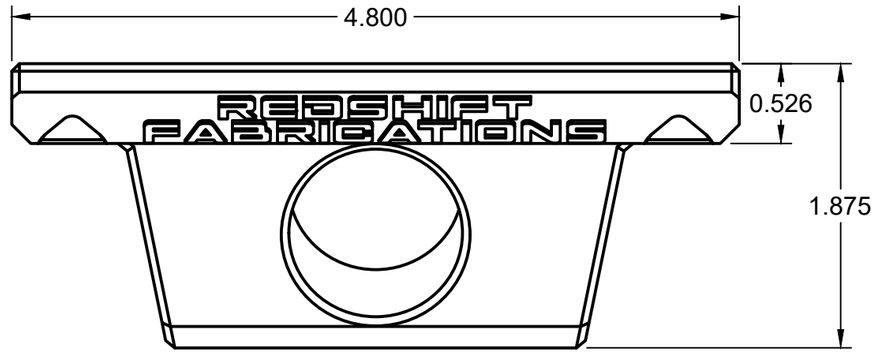

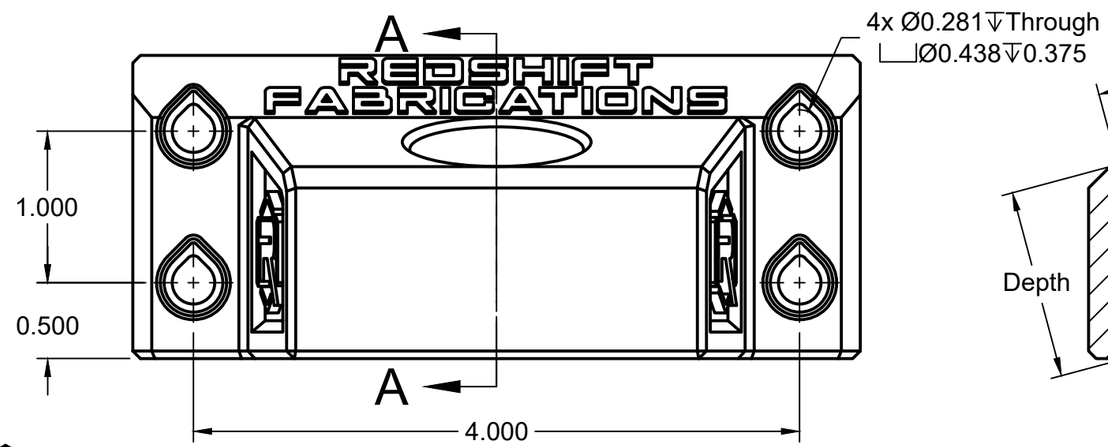

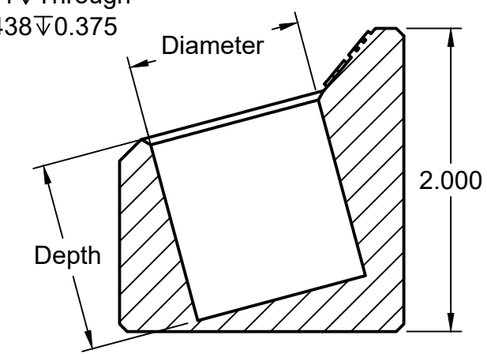

SECTION A-A
SCALE 1:1

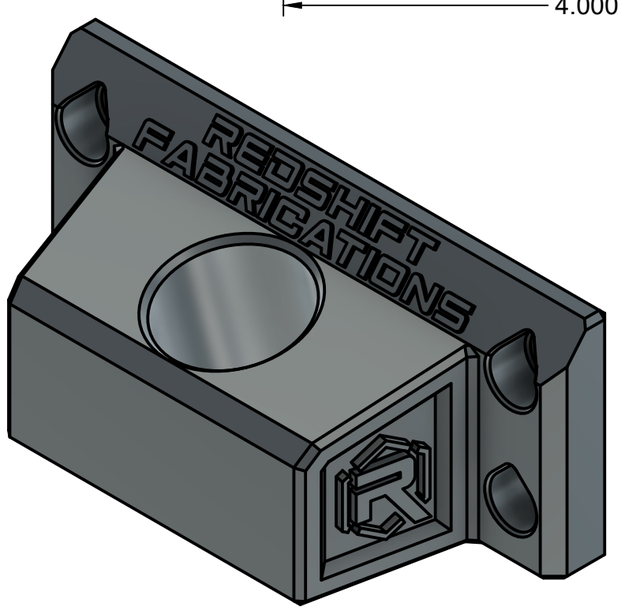

Part Number	Diameter	Depth
3DP-00320	4mm	12mm
3DP-00321	5mm	12mm
3DP-00322	6mm	12mm
3DP-00323	7mm	16mm
3DP-00324	8mm	16mm
3DP-00325	9mm	16mm
3DP-00326	10mm	16mm
3DP-00327	11mm	16mm
3DP-00328	12mm	19mm
3DP-00329	13mm	19mm
3DP-00330	14mm	19mm
3DP-00331	15mm	19mm
3DP-00332	16mm	22mm
3DP-00333	17mm	22mm
3DP-00334	18mm	22mm
3DP-00335	19mm	25mm
3DP-00336	20mm	25mm
3DP-00337	21mm	25mm
3DP-00338	22mm	25mm
3DP-00339	23mm	25mm
3DP-00340	24mm	25mm
3DP-00341	25mm	32mm
3DP-00342	26mm	32mm
3DP-00343	27mm	32mm
3DP-00344	28mm	32mm
Holders are produced with 0.020" clearance (larger on diameter)		

PROJECT
RedShift Fabrications

TITLE
ToolDock - SMCHML 1

APPROVED	SIZE	CODE	DWG NO	REV
CHECKED	B			
DRAWN J.D. 1/6/2026	SCALE 1:1 (From parent)	WEIGHT		SHEET 1/1