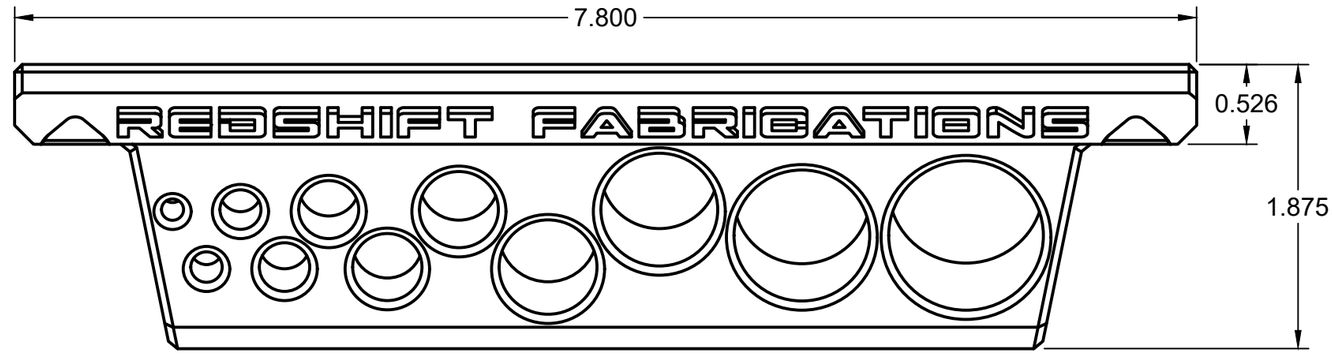

Diameter	Depth
0.125	0.500
0.188	0.500
0.250	0.500
0.313	0.625
0.375	0.625
0.438	0.625
0.500	0.750
0.625	0.875
0.750	1.000
0.875	1.000
1.000	1.250
Holders are produced with 0.020" clearance (larger on diameter)	

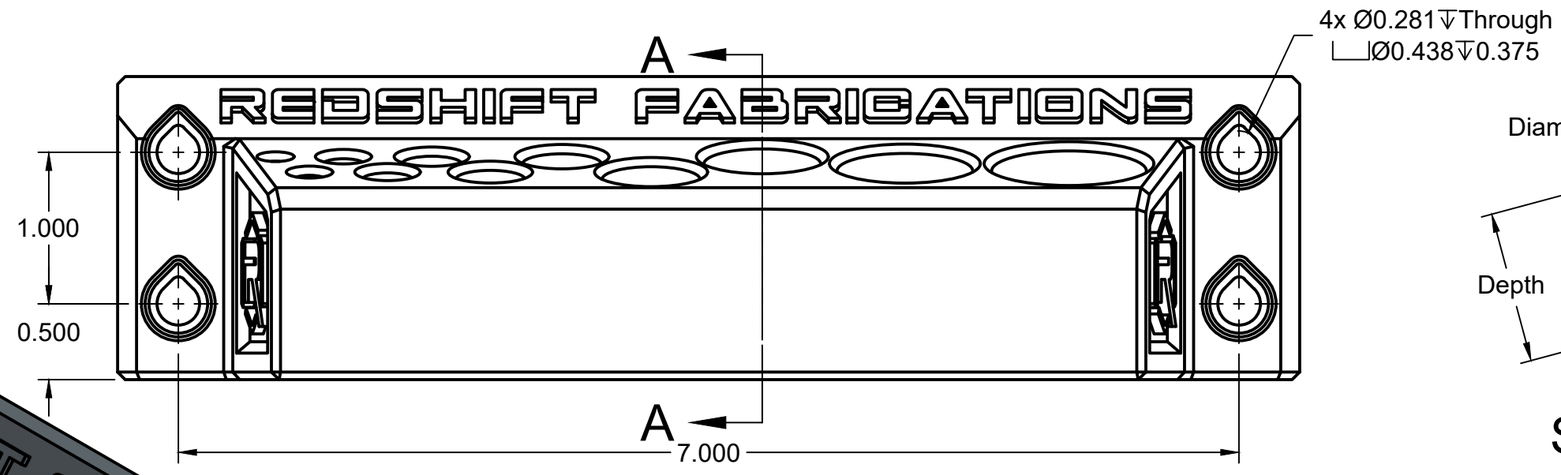

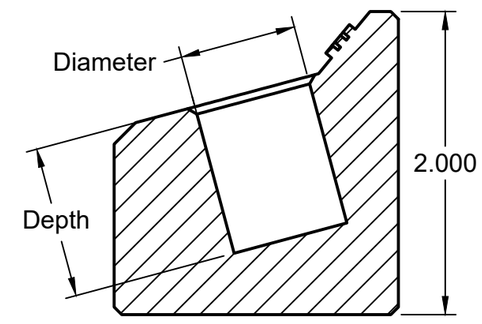

SECTION A-A

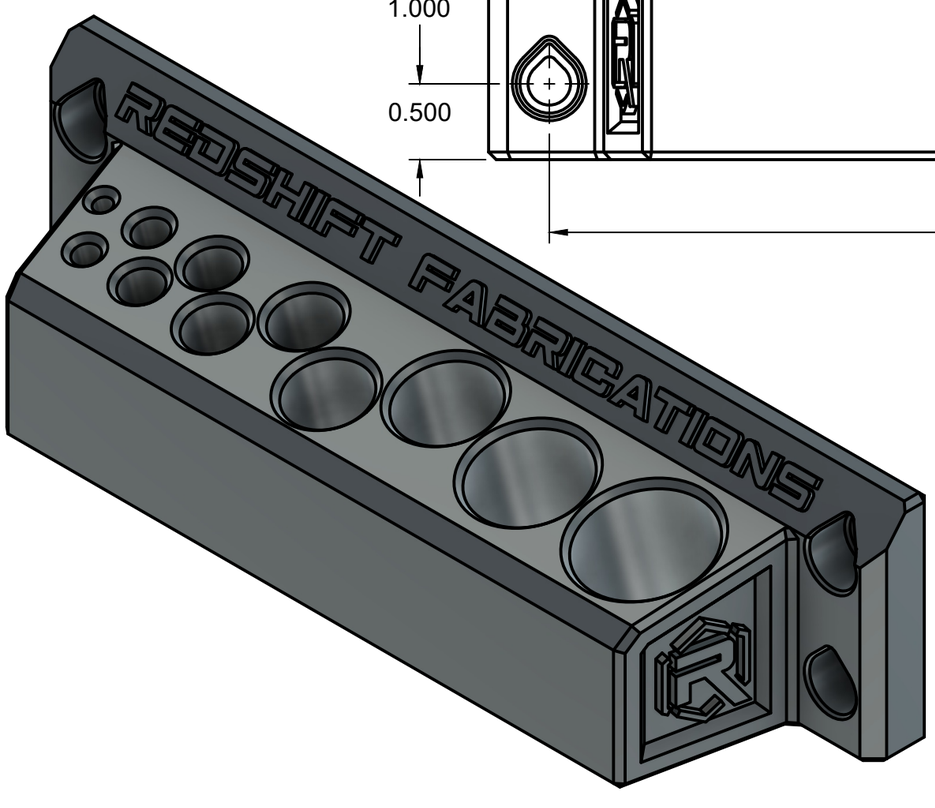

	PROJECT RedShift Fabrications			
	TITLE ToolDock - SLMHCHSL 1/8 - 1			
APPROVED	SIZE	CODE	DWG NO	REV
CHECKED	B			
DRAWN J.D. 1/9/2026	SCALE 1:1 (From parent)	WEIGHT		SHEET 1/1